HARMAN-KARDON
MODEL TA-230

TRADE NAME	Harman-Kardon Model TA-230 (Stereo Festival)		
MANUFACTURER	Harman-Kardon, Inc., 520 Main Street, Westbury, L. I., N. Y.		
TYPE SET	AC Operated 20 Tube FM-AM Receiver With Stereo Output		
POWER SUPPLY	105-125 Volts AC, 60 Cycles	RATING	130 Watts, 1.5 Amp. @ 117 Volts AC
TUNING RANGE	BROADCAST 530 - 1640KC	FREQ. MOD.	88 - 108MC

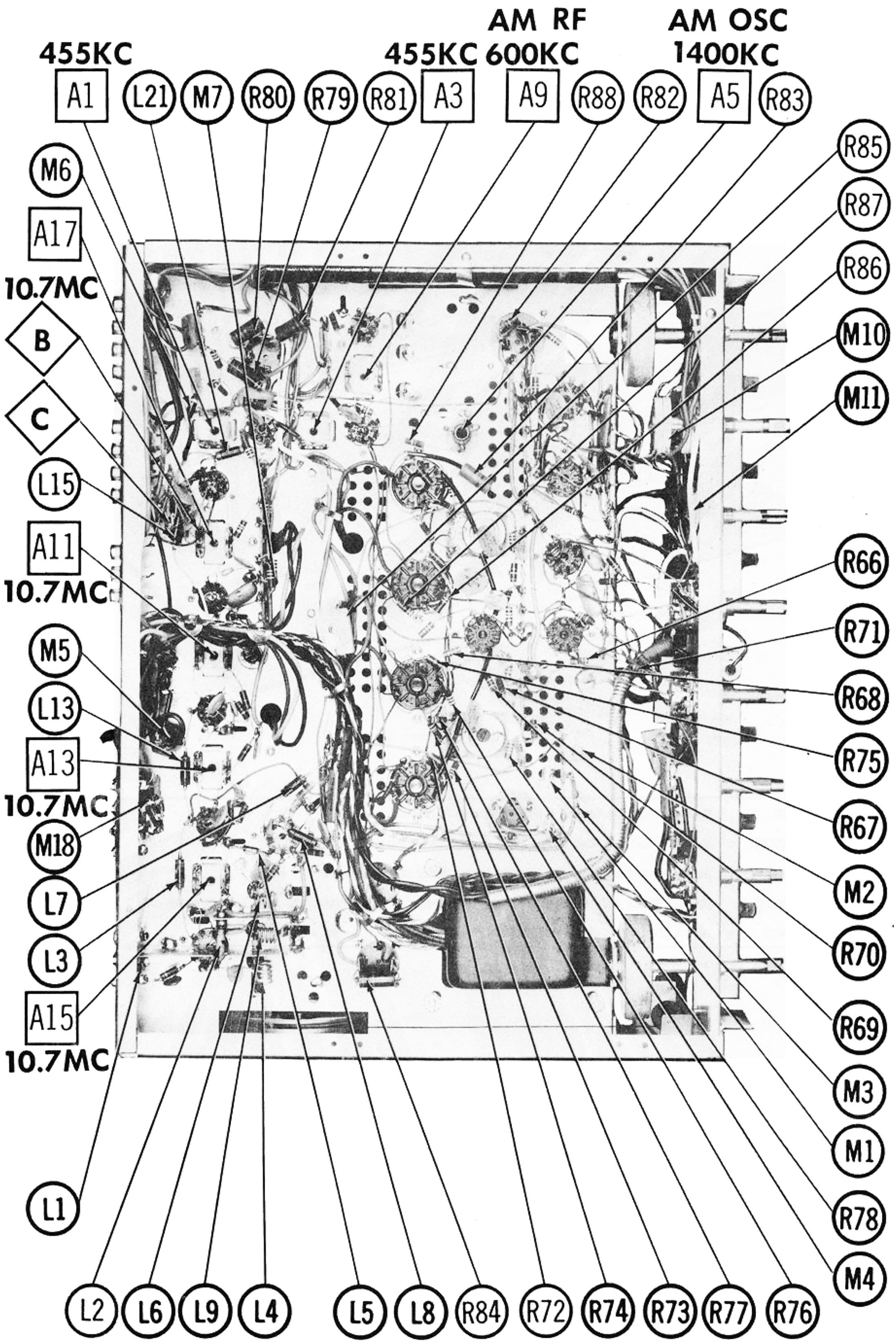

CHASSIS BOTTOM VIEW
ALIGNMENT, INDUCTOR, MISC. & RESISTOR (R66-R88) IDENT.

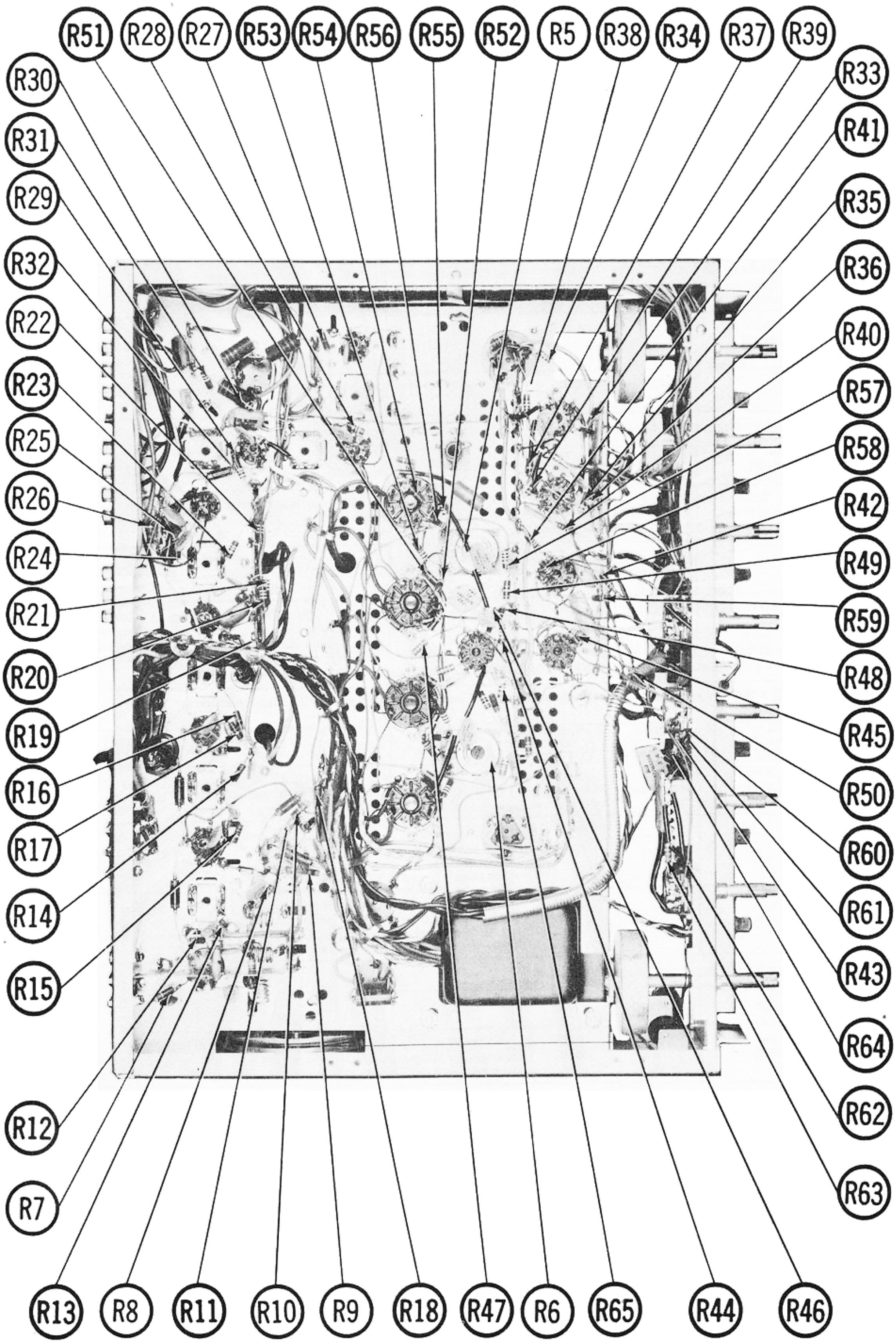

CHASSIS BOTTOM VIEW - RESISTOR (R5-R65) IDENT.

ALIGNMENT INSTRUCTIONS

PRE-ALIGNMENT INSTRUCTIONS

Volume control should be at maximum position. Output of signal generator should be no higher than necessary to obtain an output reading.

Suggested Alignment Tools:

A1 thru A4, A9, A11 thru A18	GENERAL CEMENT #5004, 5008, 5009 WALSCO #2520
A5, A6, A7, A19, A20, A21	GENERAL CEMENT #5097, 8727 WALSCO #2515
A8	GENERAL CEMENT #8282, 8606, 8606L, 9295 WALSCO #2526, 2543, 2544, 2545

AM ALIGNMENT - SELECTOR IN AM POSITION

	SIGNAL GENERATOR COUPLING	SIGNAL GENERATOR FREQUENCY	RADIO DIAL SETTING	OUTPUT METER	ADJUST	REMARKS
1.	High side thru .1mfd to pin 7 (grid) of AM Converter. Low side to chassis.	455KC (400∿ Mod.)	(AM) Tuning gang fully open	Across voice coil	A1, A2, A3, A4	Adjust for maximum output.
2.	High side thru .1mfd to AM antenna terminal. Low side to chassis.	1400KC	1400KC	"	A5, A6, A7	"
3.	"	600KC	600KC	"	A8, A9, A10	Adjust for maximum output. Repeat steps 2 and 3.

FM IF ALIGNMENT USING AM SIGNAL GENERATOR AND VTVM - SELECTOR IN FM POSITION

	SIGNAL GENERATOR COUPLING	SIGNAL GENERATOR FREQUENCY	RADIO DIAL SETTING	CONNECT VTVM	ADJUST	REMARKS
4.	High side thru .01mfd to pin 7 (grid) of FM Mixer. Low side to chassis.	10.7MC (Unmod.)	(FM) Point of non-interference	DC probe to point (A). Common to chassis.	A11, A12, A13, A14, A15, A16	Adjust for maximum deflection.
5.	"	"	"	DC probe thru 1meg to point (B). Common to chassis.	A17	"
6.	"	"	"	DC probe to point (C). Common to chassis.	A18	Adjust for zero reading. A positive and negative reading will be obtained on either side of the correct setting.

FM IF ALIGNMENT USING FM SIGNAL GENERATOR AND OSCILLOSCOPE - SELECTOR IN FM POSITION

Use frequency modulated signal with 60∿ modulation and 450KC sweep. Use 120∿ sawtooth voltage in scope for horizontal deflection.

	SIGNAL GENERATOR COUPLING	SIGNAL GENERATOR FREQUENCY	RADIO DIAL SETTING	CONNECT SCOPE	ADJUST	REMARKS
4.	High side thru .01mfd to pin 7 (grid) of FM Mixer. Low side to chassis.	10.7MC (450KC swp)	(FM) Point of non-interference	Vert. Amp. to point (A). Low side to chassis.	A11, A12, A13, A14, A15, A16	Adjust for maximum gain and symmetry of response similar to Fig. 1.
5.	"	"	"	Vert. Amp. thru 27K to point (B). Low side to chassis.	A17	"
6.	"	"	"	Vert. Amp. to point (C). Low side to chassis.	A18	Adjust to place marker at the center of crossover lines similar to Fig. 2. SLIGHTLY retouch A17 for maximum amplitude and straightness of crossover lines.

FM RF ALIGNMENT - SELECTOR IN FM POSITION

	SIGNAL GENERATOR COUPLING	SIGNAL GENERATOR FREQUENCY	RADIO DIAL SETTING	CONNECT VTVM	ADJUST	REMARKS
7.	Across FM antenna terminals with 120Ω in each lead.	106MC (Unmod.)	(FM) 106MC	DC probe to point (A). Common to chassis.	A19, A20, A21	Adjust for maximum deflection.
8.	"	90MC	90MC	"	L9, L6, L4	"

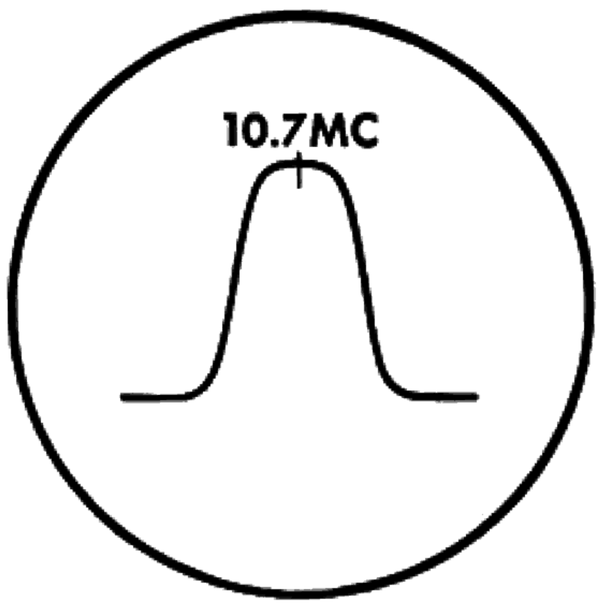

FIG. 1

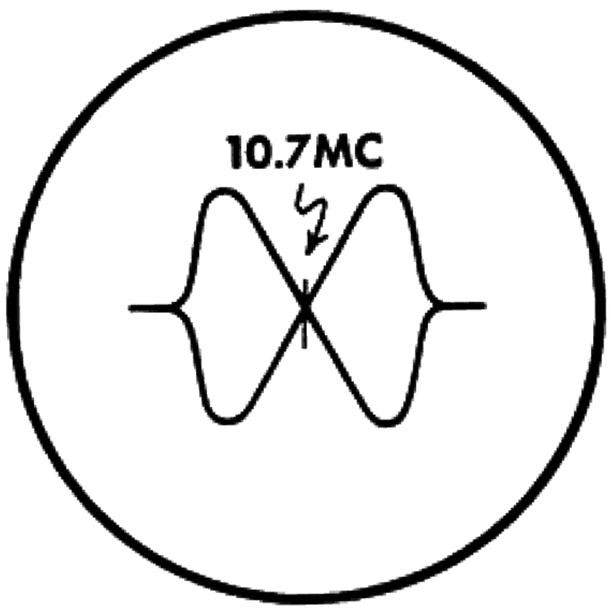

FIG. 2

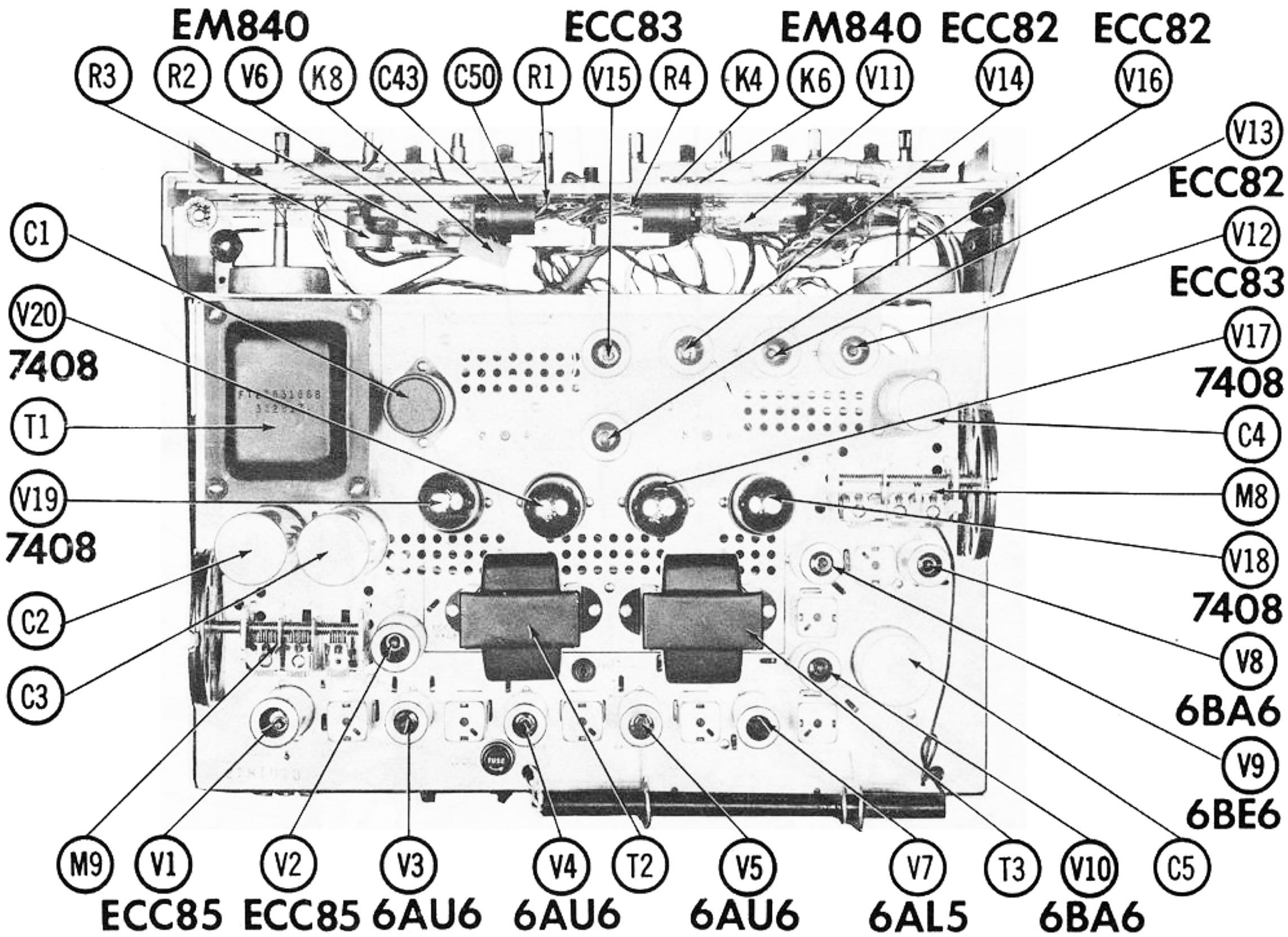

CHASSIS TOP VIEW

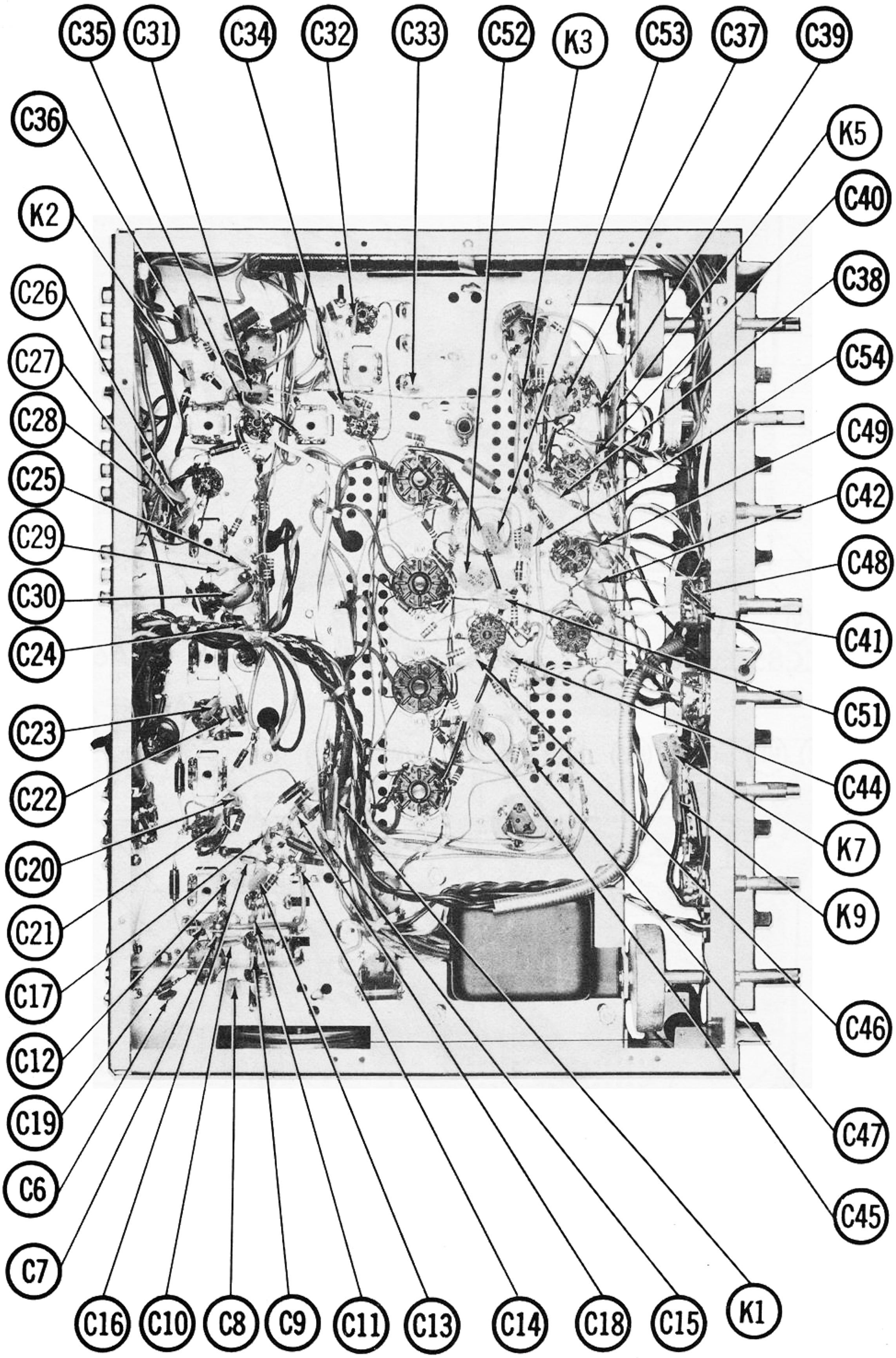

CHASSIS BOTTOM VIEW-CAPACITOR IDENTIFICATION

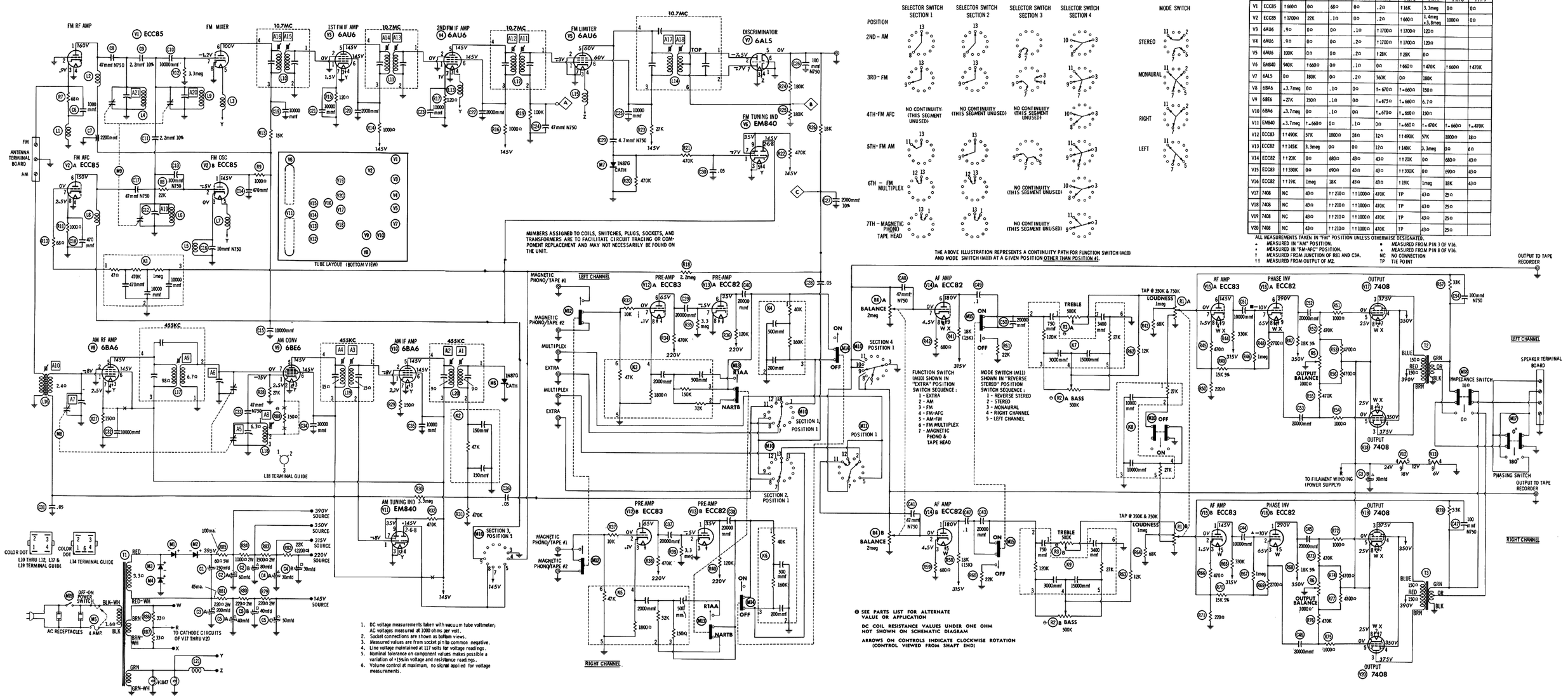

RESISTANCE READINGS

ITEM	TUBE	Pin 1	Pin 2	Pin 3	Pin 4	Pin 5	Pin 6	Pin 7	Pin 8	Pin 9
V1	ECC85	↑660Ω	0Ω	68Ω	0Ω	.2Ω	↑16K	3.3meg	0Ω	0Ω
V2	ECC85	↑1700Ω	22K	.1Ω	0Ω	.2Ω	↑660Ω	1.4meg ↓3.8meg	1000Ω	0Ω
V3	6AU6	.9Ω	0Ω	0Ω	.1Ω	↑1700Ω	↑1700Ω	120Ω		
V4	6AU6	.9Ω	0Ω	0Ω	.2Ω	↑1700Ω	↑1700Ω	120Ω		
V5	6AU6	100K	0Ω	0Ω	.2Ω	↑28K	↑28K	0Ω		
V6	EM840	940K	↑660Ω	0Ω	.1Ω	0Ω	↑660Ω	↑470K	↑660Ω	↑470K
V7	6AL5	0Ω	180K	0Ω	.2Ω	360K	0Ω	180K		
V8	6BA6	↓3.7meg	0Ω	.1Ω	0Ω	↑↓670Ω	↑↓660Ω	150Ω		
V9	6BE6	↓27K	150Ω	.1Ω	0Ω	↑↓675Ω	↑↓660Ω	6.7Ω		
V10	6BA6	↓3.7meg	0Ω	.1Ω	0Ω	↑↓670Ω	↑↓660Ω	150Ω		
V11	EM840	↓3.7meg	↑↓660Ω	0Ω	.1Ω	0Ω	↑↓660Ω	↑↓470K	↑↓660Ω	↑↓470K
V12	ECC83	↑↑490K	57K	1800Ω	24Ω	12Ω	↑↑490K	57K	1800Ω	18Ω
V13	ECC82	↑↑145K	3.3meg	0Ω	0Ω	12Ω	↑↑140K	3.3meg	0Ω	6Ω
V14	ECC82	↑↑20K	0Ω	680Ω	43Ω	43Ω	↑↑20K	0Ω	680Ω	43Ω
V15	ECC83	↑↑330K	0Ω	690Ω	43Ω	43Ω	↑↑330K	0Ω	690Ω	43Ω
V16	ECC82	↑↑19K	1meg	18K	43Ω	43Ω	↑↑19K	1meg	18K	43Ω
V17	7408	NC	43Ω	↑↑210Ω	↑↑1000Ω	470K	TP	43Ω	25Ω	
V18	7408	NC	43Ω	↑↑210Ω	↑↑1000Ω	470K	TP	43Ω	25Ω	
V19	7408	NC	43Ω	↑↑210Ω	↑↑1000Ω	470K	TP	43Ω	25Ω	
V20	7408	NC	43Ω	↑↑210Ω	↑↑1000Ω	470K	TP	43Ω	25Ω	

ALL MEASUREMENTS TAKEN IN "FM" POSITION UNLESS OTHERWISE DESIGNATED.
- ▲ MEASURED IN "AM" POSITION.
- ★ MEASURED IN "FM-AFC" POSITION.
- ↑ MEASURED FROM JUNCTION OF R81 AND C3A.
- ↑↑ MEASURED FROM OUTPUT OF M2.
- ● MEASURED FROM PIN 3 OF V16.
- ▲ MEASURED FROM PIN 8 OF V16.
- NC NO CONNECTION
- TP TIE POINT

PARTS LIST AND DESCRIPTIONS

TUBES

ITEM No.	USE	TYPE (CBS / GENERAL ELECTRIC / RAYTHEON / SYLVANIA)
V1	FM RF Amp. - FM Mixer	ECC85 (6AQ8) *
V2	FM AFC - FM Osc.	ECC85 (6AQ8) *
V3	1st FM IF Amplifier	6AU6
V4	2nd FM IF Amplifier	6AU6
V5	FM Limiter	6AU6
V6	FM Tuning Indicator	EM840
V7	Discriminator	6AL5
V8	AM RF Amplifier	6BA6
V9	AM Converter	6BE6
V10	AM IF Amplifier	6BA6
V11	AM Tuning Indicator	EM840
V12	Left Channel Preamp. - Right Channel Preamp.	ECC83 (12AX7) *
V13	Left Channel Preamp. - Right Channel Preamp.	ECC82 (12AU7) *
V14	Left Channel AF Amp. - Right Channel AF Amp.	ECC82 (12AU7) *
V15	Left Channel AF Amp. - Right Channel AF Amp.	ECC83 (12AX7) *
V16	Left Channel Phase Inv. - Right Channel Phase Inv.	ECC82 (12AU7) *
V17	Left Channel Output	7408 (6V6GT) *
V18	Left Channel Output	7408 (6V6GT) *
V19	Right Channel Output	7408 (6V6GT) *
V20	Right Channel Output	7408 (6V6GT) *

* Alternate

ELECTROLYTIC CAPACITORS

ITEM No.	RATING CAP.	RATING VOLT.	Harman-Kardon PART No.	AEROVOX PART No.	CORNELL-DUBILIER PART No.	MALLORY PART No.	PYRAMID PART No.	SPRAGUE PART No.	NOTES
C1	150	250	JE2783168					TVLS-1539 *	
C2A	▪60	400	JE2783172	AFH2-45-40	B0354	FP229.4	TMD-59	TVL-2677	
B	▲80	400							
C3A	▪200	250	JE2783169	AFH3-101-60	XA0318	FP217.74	TMS-75	TVL-2538	
B	▲200	50			BR20015		TD-200-150		
C4A	▲30	350	JE2763170	AFH2-39	B0310	FP227.3	TMD-37	TVL-2628	
B	■30	350							
C5A	▲40	200	JE2502988	AFH4-02-10	D0022	FP375.4	TMD-31	TVL-4580	
B	■40	200					TD-50-450		
C	▪50	200							

* Not normally in distributor's stock. Available thru distributor on order to manufacturer.

FIXED CAPACITORS

Capacity values given in the rating column are in mfd. for Paper Capacitors, and in mmfd. for Mica and Ceramic Capacitors.

ITEM No.	RATING	REMARKS	AEROVOX PART No.	CENTRALAB PART No.	CORNELL-DUBILIER PART No.	ELMENCO PART No.	MALLORY PART No.	SPRAGUE PART No.
C6	1000		BPD-001	DD-102	BYA10D1	CCD-102	GP210	5HK-D10
C7	2200		BPD-0022	DD-222	BYA10D22	CCD-222	GP222	5HK-D22
C8	47 N750		N750-DI 47	DTN-47	C10Q47U	CCTN-470	CN7-447	10TCU-Q47
C9	2.2 10%		NPO-SI 2.2	TCZ-2R2	C10V22C	CCTO-2R2	CNO-522	10TCC-V22
C10	10000		BPD-01	DD-103	BYA10S1	CCD-103	GP110	5HK-S10
C11	2.2 10%		NPO-SI 2.2	TCZ-2R2	C10V22C	CCTO-2R2	CNO-522	10TCC-V22
C12								
C13	100 N750		N750-DI 100	DTN-100	C10T1U	CCTN-101	CN7-310	10TCU-T10
C14	470		BPD-00047	DD-471	BYA10T47	CCD-471	GP347	10TS-T47
C15	10000		BPD-01	DD-103	BYA10S1	CCD-103	GP110	5HK-S10
C16	10 N750		N750-DI 10	DTN-10	C10Q1U	CCTN-100	CN7-410	10TCU-Q10
C17	47 N750		N750-DI 47	DTN-47	C10Q47U	CCTN-470	CN7-447	10TCU-Q47
C18	470		BPD-00047	DD-471	BYA10T47	CCD-471	GP347	10TS-T47
C19	10000		BPD-01	DD-103	BYA10S1	CCD-103	GP110	5HK-S10

FIXED CAPACITORS (cont)

ITEM No.	RATING	REMARKS	AEROVOX PART No.	CENTRALAB PART No.	CORNELL-DUBILIER PART No.	ELMENCO PART No.	MALLORY PART No.	SPRAGUE PART No.
C20	2000		BPD-002	DD-202	BYA10D2	CCD-202	GP220	5HK-D20
C21	10000		BPD-01	DD-103	BYA10S1	CCD-103	GP110	5HK-S10
C22	2000		BPD-002	DD-202	BYA10D2	CCD-202	GP220	5HK-D20
C23	10000		BPD-01	DD-103	BYA10S1	CCD-103	GP110	5HK-S10
C24	47 N750		N750-DI 47	DTN-47	C10Q47U	CCTN-470	CN7-447	10TCU-Q47
C25	10000		BPD-01	DD-103	BYA10S1	CCD-103	GP110	5HK-S10
C26	100 N750		N750-DI 100	DTN-100	C10T1U	CCTN-101	CN7-310	10TCU-T10
C27	2000 10%		DI-2000		PM6D2	CCD-202	GP220	10TS-D20
C28	.05 200V		P288N-05	DD-503	CUB2S5	4DP-3-503	GEM-415	2TM-S5
C29	4.7 N750		N750-DI 4.7	DTN-4R7	C10V5U	CCTN-050	CN7-547	10TCU-V50
C30	.05 400V		P488N-05	DD-503	CUB4S5	4DP-3-503	GEM-415	4TM-S5
C31	.05 400V		P488N-05	DD-503	CUB4S5	4DP-3-503	GEM-415	4TM-S5
C32	10000		BPD-01	DD-103	BYA10S1	CCD-103	GP110	5HK-S10
C33	47 N750		N750-DI 47	DTN-47	C10Q47U	CCTN-470	CN7-447	10TCU-Q47
C34	10000		BPD-01	DD-103	BYA10S1	CCD-103	GP110	5HK-S10
C35	10000		BPD-01	DD-103	BYA10S1	CCD-103	GP110	5HK-S10
C36	.05 200V		P288N-05	DD-503	CUB2S5	4DP-3-503	GEM-415	2TM-S5
C37	20000		BPD-02	DD-203	BYB6S2	CCD-203	GP120	5HK-S20
C38	20000		BPD-02	DD-203	BYB6S2	CCD-203	GP120	5HK-S20
C39	20000		BPD-02	DD-203	BYB6S2	CCD-203	GP120	5HK-S20
C40	20000		BPD-02	DD-203	BYB6S2	CCD-203	GP120	5HK-S20
C41	47 N750		N750-DI 47	DTN-47	C10Q47U	CCTN-470	CN7-447	10TCU-Q47
C42	.1 400V		P488N-1	DF-104	CUB4P1	4DP-3-104	GEM-401	4TM-P1
C43	20000		BPD-02	DD-203	BYB6S2	CCD-203	GP120	5HK-S20
C44	10000		BPD-01	DD-103	BYA10S1	CCD-103	GP110	5HK-S10
C45	20000		BPD-02	DD-203	BYB6S2	CCD-203	GP120	5HK-S20
C46	20000		BPD-02	DD-203	BYB6S2	CCD-203	GP120	5HK-S20
C47	100 N750		N750-DI 100	DTN-100	C10T1U	CCTN-101	CN7-310	10TCU-T10
C48	47 N750		N750-DI 47	DTN-47	C10Q47U	CCTN-470	CN7-447	10TCU-Q47
C49	.1 400V		P488N-1	DF-104	CUB4P1	4DP-3-104	GEM-401	4TM-P1
C50	20000		BPD-02	DD-203	BYB6S2	CCD-203	GP120	5HK-S20
C51	10000		BPD-01	DD-103	BYA10S1	CCD-103	GP110	5HK-S10
C52	20000		BPD-02	DD-203	BYB6S2	CCD-203	GP120	5HK-S20
C53	20000		BPD-02	DD-203	BYB6S2	CCD-203	GP120	5HK-S20
C54	100 N750		N750-DI 100	DTN-100	C10T1U	CCTN-101	CN7-310	10TCU-T10

CONTROLS

ITEM No.	RATING RESISTANCE	RATING WATTS	Harman-Kardon PART No.	CENTRALAB PART No.	CLAROSTAT PART No.	CTS-IRC PART No.	MALLORY PART No.	INSTALLATION NOTES
R1A	1meg *	½	RVCOM3368					Loudness, Left Channel
B	1meg *	½						Loudness, Right Channel
R2A	500K	½	RV2783209 ①					Bass, Left Channel
B	500K	½						Bass, Right Channel
R3A	500K	½	RV2783209 ①					Treble, Left Channel
B	500K	½						Treble, Right Channel
R4A	2meg	½	RV2783303	B-75	AD47-2meg-S		FA26L	Balance, Left Channel
B	2meg	½		SR-75	Not Req.		RU26L	Balance, Right Channel
C	Shaft			Not Req.	KSS-3		CS3500	
R5A	1000Ω	½	RV2783331			B11-108		Output Balance, Left Chan.
B	Shaft					TM4		
R6A	1000Ω	½	RV2783331			B11-108		Output Balance, Right Chan.
B	Shaft					TM4		

① Some versions may use Part #RV2783207.

* Taps @ 350K and 750K.

PARTS LIST AND DESCRIPTIONS (Continued)

RESISTORS

All wattages 1/2 watt, or less, unless otherwise listed.

ITEM No.	RATING	REMARKS
R7	68Ω	
R8	22K	
R9	1000Ω	
R10	68Ω	
R11	1000Ω	
R12	3.3meg	
R13	15K	
R14	1000Ω	
R15	120Ω	
R16	1000Ω	
R17	120Ω	
R18	2.2meg	
R19	100K	
R20	470K	
R21	470K	
R22	470K	
R23	27K	
R24	180K	
R25	180K	
R26	18K	
R27	150Ω	
R28	27K	
R29	150Ω	
R30	3.3meg	
R31	470K	
R32	470K	
R33	10K	
R34	470K	

* Alternate Value.

ITEM No.	RATING	REMARKS
R35	3.3meg	
R36	120K	
R37	10K	
R38	470K	
R39	3.3meg	
R40	120K	
R41	18K	(15K) *
R42	680Ω	
R43	68K	
R44	330K	
R45	470Ω	
R46	1meg	
R47	18K 5%	
R48	2700Ω	
R49	15K 5%	
R50	220Ω	
R51	1000Ω	
R52	470K	
R53	4700Ω	
R54	1000Ω	
R55	470K	
R56	4700Ω	
R57	33K	
R58	18K	(15K) *
R59	680Ω	
R60	22K	
R61	22K	
R62	12K	

ITEM No.	RATING	REMARKS
R63	12K	
R64	68K	
R65	330K	
R66	470Ω	
R67	1meg	
R68	18K 5%	
R69	2700Ω	
R70	15K 5%	
R71	220Ω	
R72	1000Ω	
R73	470K	
R74	4700Ω	
R75	1000Ω	
R76	470K	
R77	4700Ω	
R78	33K	
R79	220Ω 2W	
R80	220Ω 2W	
R81	220Ω 2W	
R82	22K	(2200Ω) *
R83	1500Ω 2W	
R84	1000Ω 2W	
R85	60Ω 2W	
R86	33Ω	
R87	33Ω	
R88	150Ω	Note 1

Note 1. Not used in some versions.

COMPONENT COMBINATIONS

ITEM No.	USE	DESCRIPTION	Harman-Kardon PART No.	REPLACEMENT DATA	
K1	FM AFC Filter	470mmf, 10000mmf, 10000mmf, 47Ω, 470K, 1meg	PCCOM3080	Sprague	V-21
K2	AM Det. RF Filter	150mmf, 150mmf, 47K	P781599	Aerovox Centralab Cornell-Dubilier Sprague	PA-98 PC-51 111TM2 D-2
K3	Equalization Compensator	500mmf, 2000mmf, 1800Ω, 32K, 47K, 150K	PCCOM3248	Sprague	TC-25
K4	Scratch Filter Comp.	200mmf, 500mmf, 40K, 160K	PC2783367	Sprague	TC-29
K5	Equalization Compensator	500mmf, 2000mmf, 1800Ω, 32K, 47K, 150K	PCCOM3248	Sprague	TC-25
K6	Scratch Filter Comp.	200mmf, 500mmf, 40K, 160K	PC2783367	Sprague	TC-29
K7	Tone Compensator	750mmf, 3000mmf, 3400mmf, 15000mmf, 27K, 120K	PC2492902	Sprague	TC-22
K8	Contour Compensator	(2) 10000mmf, (2) 27K	PC2783366	Sprague	TC-28
K9	Tone Compensator	750mmf, 3000mmf, 3400mmf, 15000mmf, 27K, 120K	PC2492902	Sprague	TC-22

COILS (RF-IF)

ITEM No.	USE	REPLACEMENT DATA						NOTES
		Harman-Kardon PART No.	Gramer PART No.	Meissner PART No.	Merit PART No.	Miller PART No.	Ram PART No.	
L1	FM Antenna Coil		19-2003	19-2003		4584		.24uh
L2	RF Choke							3.3uh

COILS (cont)

ITEM No.	USE	REPLACEMENT DATA						NOTES
		Harman-Kardon PART No.	Gramer PART No.	Meissner PART No.	Merit PART No.	Miller PART No.	Ram PART No.	
L3	Fil. Choke							3.3uh
L4	FM RF Coil							
L5	Cathode Choke		19-1000	19-1000	BC-561	4602		1uh
L6	FM Osc. Coil							
L7	Fil. Choke							3.3uh
L8	RF Choke							3.3uh
L9	FM Mixer Coil							
L10	1st FM IF Trans.	GT2783362	16-3487	16-3487	FM-254	1463		
L11	2nd FM IF Trans.	GT2783363	16-3487	16-3487	FM-254	1463		
L12	3rd FM IF Trans.	GT2783362	16-3487	16-3487	FM-254	1463		
L13	Fil. Choke							3.3uh
L14	Discriminator	GT2503052	17-3494	17-3494	FM-253	1464		
L15	Fil. Choke							3.3uh
L16	Loopstick	GL2783330			BC-418 *			
L17	AM RF Trans.	GT2493012						
L18	AM Osc. Coil	GLCOM3011						
L19	1st AM IF Trans.	GT2493013	16-6758	16-6758	BC-352	12-C1	RF-1	
L20	2nd AM IF Trans.	GT2493014	16-6758	16-6758	BC-353	12-C2	RF-2	
L21	Fil. Choke							3.3uh

* Use original mounting brackets.

TRANSFORMER (POWER)

ITEM No.	RATING			REPLACEMENT DATA						
	PRI.	SEC. 1	SEC. 2	Harman-Kardon PART No.	Halldorson PART No.	Merit PART No.	Ram PART No.	Stancor PART No.	Thordarson PART No.	Triad PART No.
T1	117V @ 1.5A	142V @ .740A	6.3V @ 3.9A	FT2783186B						
	SEC. 3	SEC. 4	SEC. 5							
	6.3V @ 2.7A									

TRANSFORMER (AUDIO OUTPUT)

ITEM No.	IMPEDANCE		REPLACEMENT DATA							NOTES
	PRI.	SEC.	Harman-Kardon PART No.	Halldorson PART No.	Merit PART No.	Ram PART No.	Stancor PART No.	Thordarson PART No.	Triad PART No.	
T2	6500Ω CT	16Ω Tap @ 8Ω	FT2783187							
T3	6500Ω CT	16Ω Tap @ 8Ω	FT2783187							

RECTIFIERS

ITEM No.	RATING	REPLACEMENT DATA					NOTES
	CURRENT (Measured)	Harman-Kardon PART No.	INTERNATIONAL PART No.	ITT PART No.	SARKES TARZIAN PART No.	SYLVANIA PART No.	
M1	.100A	Z2382924 ①	5E4 ①	HA154 ①	40K ①	SR500 ①	① Silicon Type
M2	.100A	Z2382924 ①	5E4 ①	HA154 ①	40K ①	SR500 ①	
M3	.100A	Z2382924 ①	5E4 ①	HA154 ①	40K ①	SR500 ①	
M4	.100A	Z2382924 ①	5E4 ①	HA154 ①	40K ①	SR500 ①	

PARTS LIST AND DESCRIPTIONS (Continued)

FUSES

ITEM No.	TYPE	RATING	REPLACEMENT DATA					
			Harman-Kardon PART No.		LITTELFUSE PART No.		BUSS PART No.	
			FUSE	HOLDER	FUSE	HOLDER	FUSE	HOLDER
M5	3AG	4A 250V	2COM3299	HC33901	312004 (3AG 4A 250V	342601	MTH 4	HKP

CRYSTAL DIODES

ITEM No.	ORIG. TYPE	REPLACEMENT DATA				NOTES
		Harman-Kardon PART No.	CBS PART No.	RAYTHEON PART No.	SYLVANIA PART No.	
M6	1N87G		1N60	1N60	1N60	AM Detector (Pigtail)
M7	1N87G		1N60	1N60	1N60	Tuning Ind. Rectifier (Pigtail)

MISCELLANEOUS

ITEM No.	PART NAME	Harman-Kardon PART No.	NOTES
M8	Tuning Cap.	JV2783183	AM, 3 Gang (Ant. 11-262mmf, RF 60-395mmf, Osc. 17-105mmf)
M9	Tuning Cap.	JV2783184	FM, 3 Gang
M10	Switch	ER2783175	Function
M11	Switch	ER2783305	Mode
M12	Switch		Magnetic Input #1 - #2 (DPDT, Slide Type)
M13	Switch		Equalization (DPDT, Slide Type)
M14	Switch		Scratch Filter, Off-On (DPDT, Slide Type)
M15	Switch		Rumble Filter, Off-On (DPDT, Slide Type)
M16	Switch		Loudness Contour, Off-On (DPDT, Slide Type)
M17	Switch		Phasing, 180 - 0
M18	Switch		Impedance, 16Ω - 8Ω (DPDT, Slide Type)
M19	Switch	EP2783298	Power, Off-On (Pushbutton Type)

CABINETS & CABINET PARTS

(When Ordering Cabinets & Cabinet Parts, Specify Model, Chassis & Color)

NAME	PART NO.	DESCRIPTION
Dial Glass	P2783196	

WIRING DATA

General-use Unshielded Hook-up Wire ..... Use BELDEN No. 8530 (Solid) Available in Ten Colors
8524 (Stranded) Available in Ten Colors

Power Cord ..... Use BELDEN No. 1765-B (6 Ft. Length)
1725-K (7½ Ft. Length)
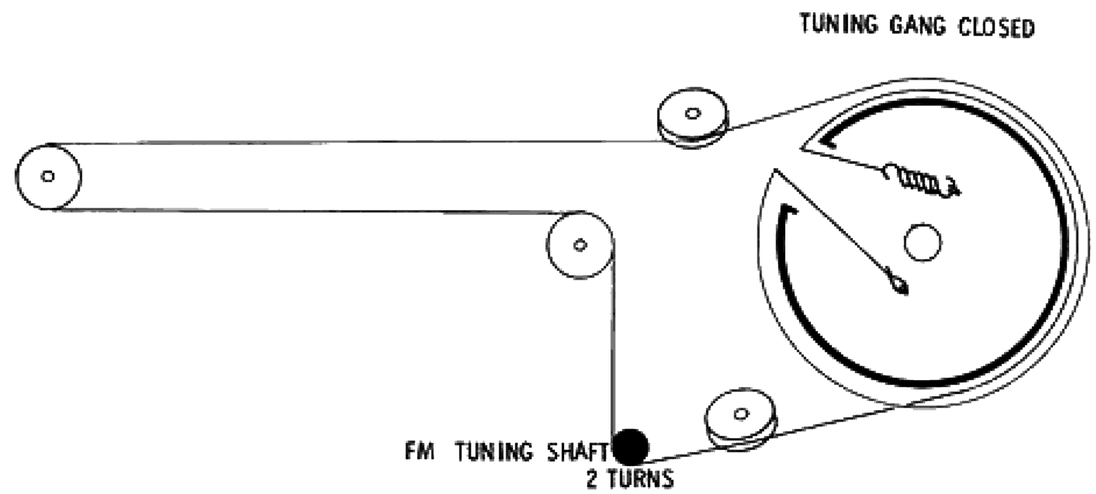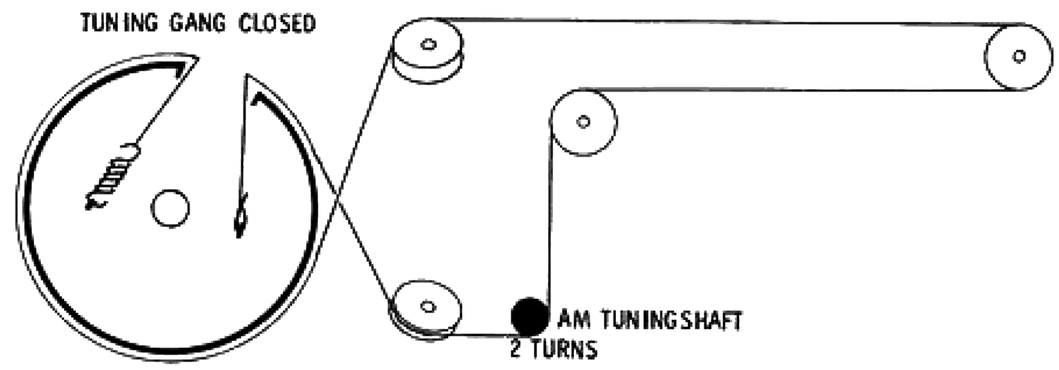
DIAL CORD STRINGING